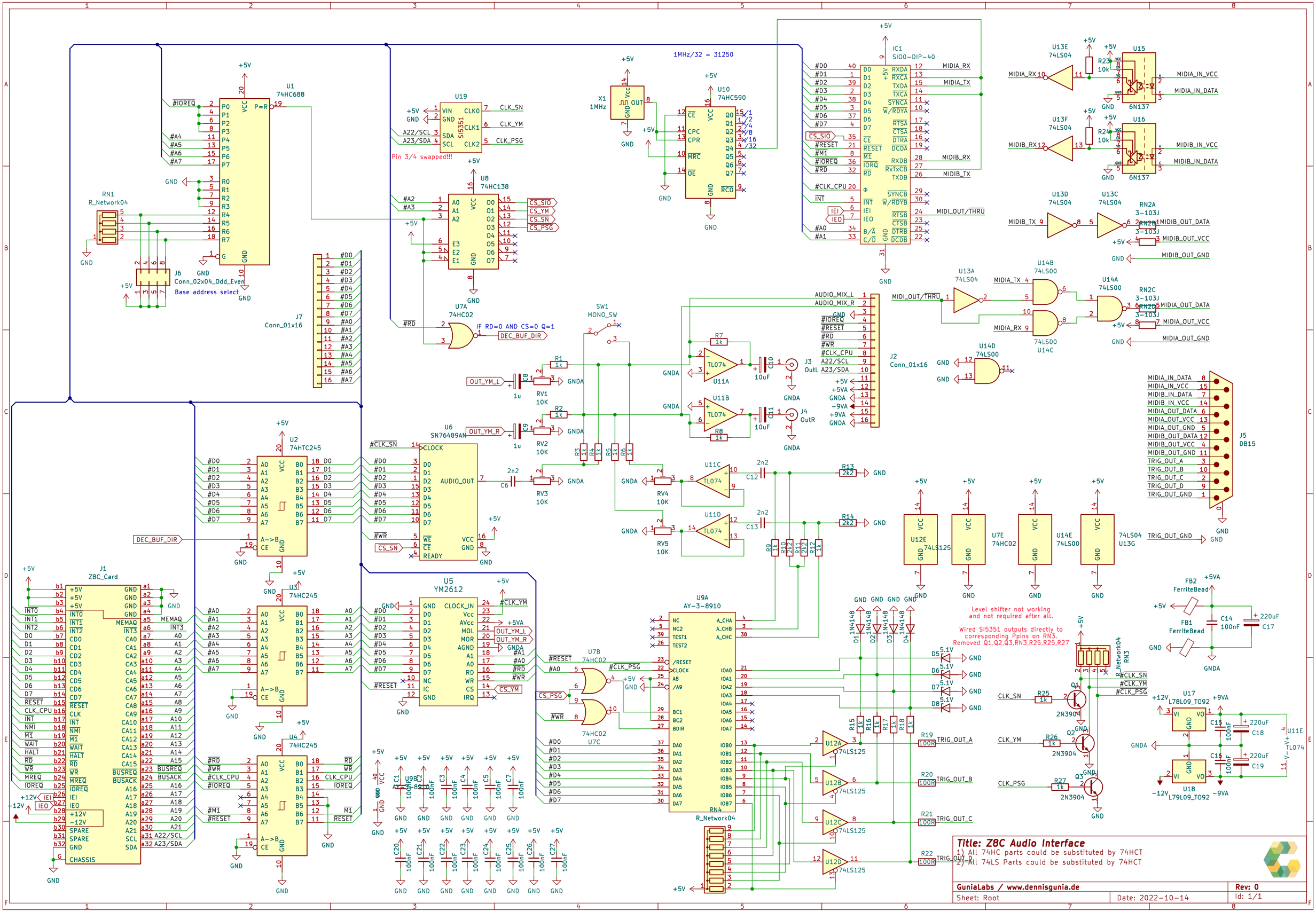
Title: Z8C Audio Interface
1) All 74HC parts could be substituted by 74HCT
2) All 74LS Parts could be substituted by 74HCT
GuniaLabs / www.dennisgunia.de
Rev: 0
Sheet: Root
Date: 2022-10-14
Id: 1/1
Pin 3/4 swapped!!!
Base address select
1MHz/32 = 31250
IF RD=0 AND CS=0 Q=1
Level shifter not working and not required after all.
Wired SI5351 outputs directly to corresponding Ppins on RN3.
Removed Q1,Q2,Q3,RN3,R25,R25,R27
U1 74HC688
U2 74HTC245
U3 74HC245
U4 74HC245
U5 YM2612
U6 SN76489AN
U7A 74HC02
U7B 74HC02
U7C 74HC02
U8 74HC138
U9A AY-3-8910
U9B AY-3-8910
U10 74HC590
U11A TL074
U11B TL074
U11C TL074
U11D TL074
U12A 74LS125
U12B 74LS125
U12C 74LS125
U12D 74LS125
U12E 74LS125
U13A 74LS04
U13C 74LS04
U13D 74LS04
U13E 74LS04
U13F 74LS04
U13G 74LS04
U14A 74LS00
U14B 74LS00
U14C 74LS00
U14D 74LS00
U14E 74LS00
U15 6N137
U16 6N137
U17 L78L09_TO92
U18 L79L09_TO92
IC1 SIO0-DIP-40
J1 Z8C_Card
J5 DB15
J6 Conn_02x04_Odd_Even
J7 Conn_01x16
J2 Conn_01x16
J3 OutL
J4 OutR
X1 1MHz
SW1 MONO_SW
RN1 R_Network04
RN2A 3-103J
RN2B 3-103J
RN2C 3-103J
RN3 R_Network04
RN4 R_Network04
FB1 FerriteBead
FB2 FerriteBead
MIDIA_RX
MIDIA_TX
MIDIA_IN_VCC
MIDIA_IN_DATA
MIDIB_RX
MIDIB_TX
MIDIB_IN_VCC
MIDIB_IN_DATA
MIDI_OUT/THRU
MIDIA_OUT_DATA
MIDIA_OUT_VCC
MIDIA_OUT_GND
MIDIB_OUT_DATA
MIDIB_OUT_VCC
MIDIB_OUT_GND
TRIG_OUT_A
TRIG_OUT_B
TRIG_OUT_C
TRIG_OUT_D
TRIG_OUT_GND
CLK_SN
CLK_YM
CLK_PSG
CS_SIO
CS_YM
CS_SN
CS_PSG
DEC_BUF_DIR
OUT_YM_L
OUT_YM_R
AUDIO_MIX_L
AUDIO_MIX_R
GNDA
+5V
+5VA
+12V
-12V
+9VA
-9VA