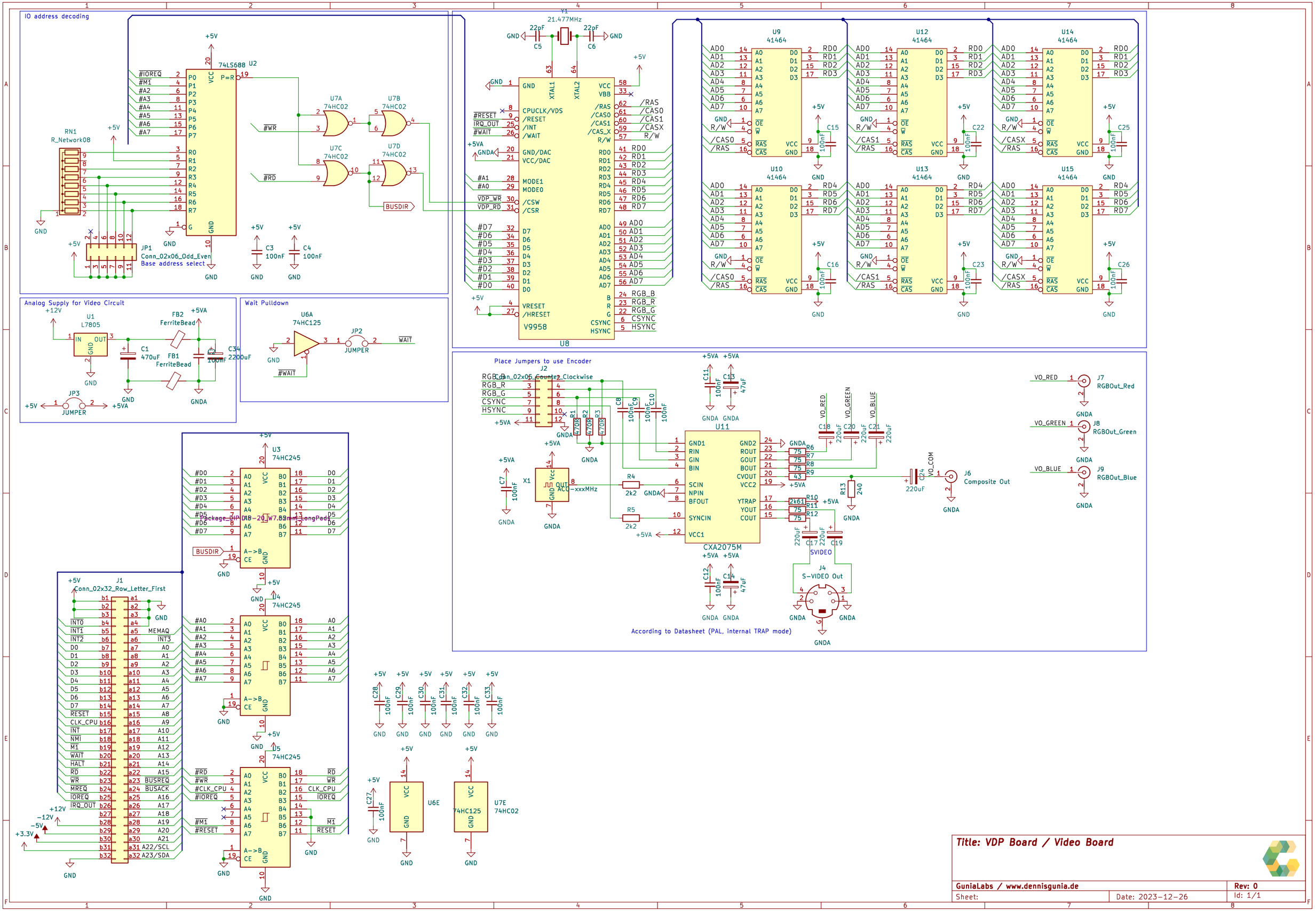

Title: VDP Board / Video Board

GuniaLabs / www.dennisgunia.de

Rev: 0

Sheet:

Date: 2023-12-26

Id: 1/1