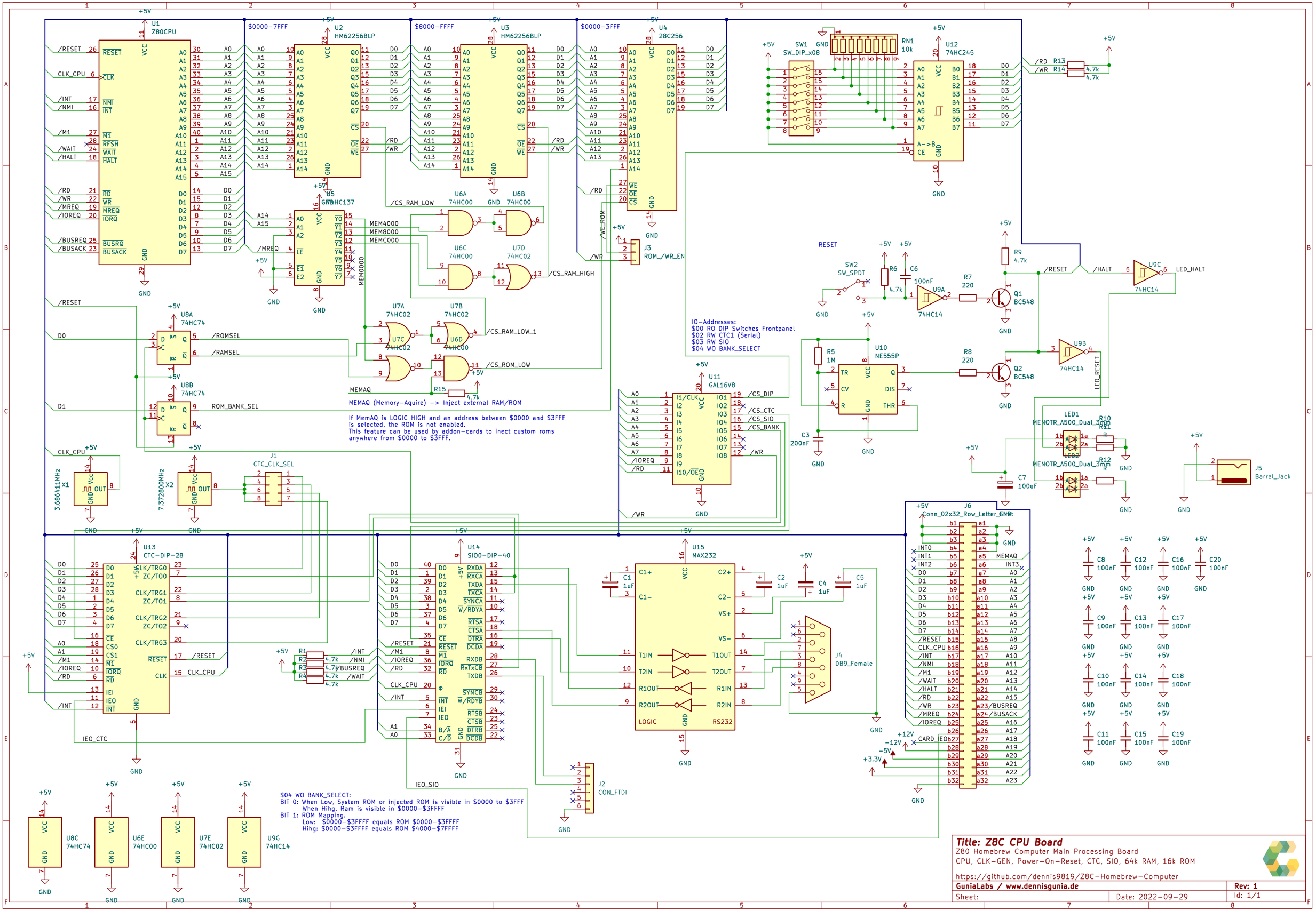
U1 Z80CPU
U2 HM62256BLP
U3 HM62256BLP
U4 28C256
$0000-7FFF
$8000-FFFF
$0000-3FFF
U5 74HC137
U6A 74HC00
U6B 74HC00
U6C 74HC00
U7D 74HC02
U7A 74HC02
U7B 74HC02
U7C 74HC02
U6D 74HC00
U8A 74HC74
U8B 74HC74
U11 GAL16V8
U12 74HC245
U10 NE555P
U9A 74HC14
U9B 74HC14
U9C 74HC14
Q1 BC548
Q2 BC548
SW1 SW_DIP_x08
RN1 10k
SW2 SW_SPDT
J3 ROM_/WR_EN
J1 CTC_CLK_SEL
X1 3.686411MHz
X2 7.372800MHz
U13 CTC-DIP-28
U14 SIO0-DIP-40
U15 MAX232
J4 DB9_Female
J2 CON_FTDI
J6 Conn_02x32_Row_Letter_First
J5 Barrel_Jack
LED1 MENOTR_A500_Dual_3mm
LED2 MENOTR_A500_Dual_3mm
MEMAQ
MEMAQ (Memory-Aquire) -> Inject external RAM/ROM
If MemAQ is LOGIC HIGH and an address between $0000 and $3FFF is selected, the ROM is not enabled.
This feature can be used by addon-cards to inect custom roms anywhere from $0000 to $3FFF.
IO-Addresses:
$00 RO DIP Switches Frontpanel
$02 RW CTC1 (Serial)
$03 RW SIO
$04 WO BANK_SELECT
$04 WO BANK_SELECT:
BIT 0: When Low, System ROM or injected ROM is visible in $0000 to $3FFF
When Hihg, Ram is visible in $0000-$3FFFF
BIT 1: ROM Mapping.
Low: $0000-$3FFFF equals ROM $0000-$3FFFF
Hihg: $0000-$3FFFF equals ROM $4000-$7FFFF
U8C 74HC74
U6E 74HC00
U7E 74HC02
U9G 74HC14
Title: Z8C CPU Board
Z80 Homebrew Computer Main Processing Board
CPU, CLK-GEN, Power-On-Reset, CTC, SIO, 64k RAM, 16k ROM
https://github.com/dennis9819/Z8C-Homebrew-Computer
GuniaLabs / www.dennisgunia.de
Rev: 1
Sheet:
Date: 2022-09-29
Id: 1/1